Part number: CTL-213-xxx
Rugged NVG Compatible LED Panel Indicators

A range of NVIS compatible panel mounting indicator light assemblies for aircraft, vehicle and boat control panels. The light sources are LEDs, so offer high reliability and low power consumption and heat generation.

Filters provide NVG compatibility with full compliance to MIL-STD-3009 and also CECOM compliant secure lighting. Threaded bodies permit simple mounting, with flying lead connection. A range of NVIS lighting colours are available, identified by the colour of the positive wire.

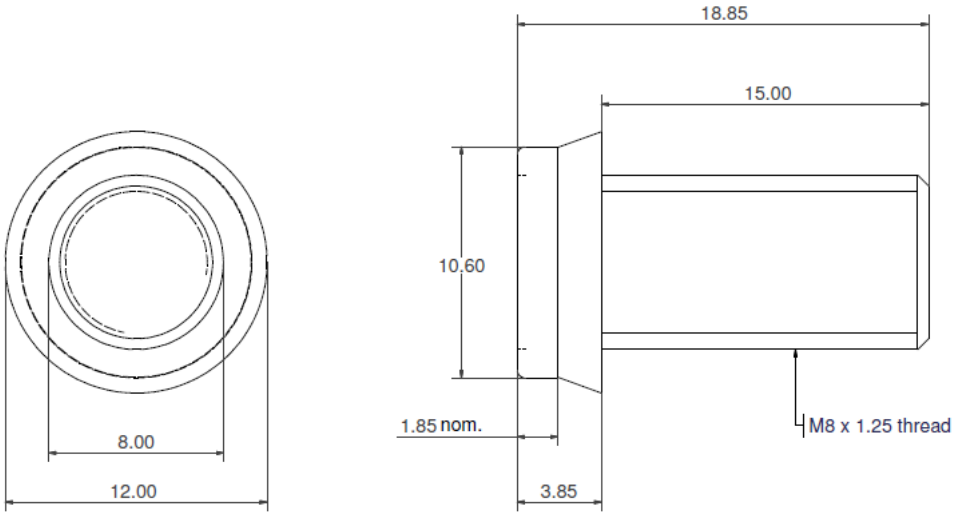

All dimensions in mm

Options available include:

- 5V, 12V or 28V DC or with no limiting resistor
- NVIS Red, NVIS Yellow, NVIS Green, NVIS White, NVIS Blue

Advantages:

- Robust sealed units, high ruggedness, designed to IP67
- Simple construction, high reliability
- Low power consumption, low heat generation
- Simple installation and connection
- NVG compatibility and chromaticity certified compliant to MIL-STD-3009 and DO-275
- CECOM compliant for ground system secure lighting applications

Consolite Technology Ltd, St. Martins Business Park, Bells Lane, Zeals, Wiltshire, BA12 6LY, UK

Tel: **+44 (0)1747 840900** **Fax:** **+44 (0)1747 841500**
e-mail: **sales@consolite.co.uk** **Web:** **www.consolite.co.uk**

Part Numbers are of the form:

CTL-213-XXX-FL-ZZ

ZZ	-05	5V
	-12	12V
	-24	24V
	-28	28V
	-00	No limiting resistor

XXX	-001	NVIS Blue
	-002	NVIS Green
	-003	NVIS Yellow
	-004	NVIS Red
	-005	NVIS White

Example: CTL-213-002-FL-28 denotes a 28V NVIS Green indicator with flying leads

Consolite Technology Ltd, St. Martins Business Park, Bells Lane, Zeals, Wiltshire, BA12 6LY, UK

Tel: **+44 (0)1747 840900** **Fax:** **+44 (0)1747 841500**
e-mail: **sales@consolite.co.uk** **Web:** **www.consolite.co.uk**